PC-18157RS

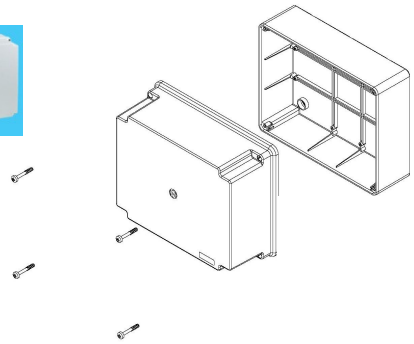

Typical image

Basic Internal Dimensions

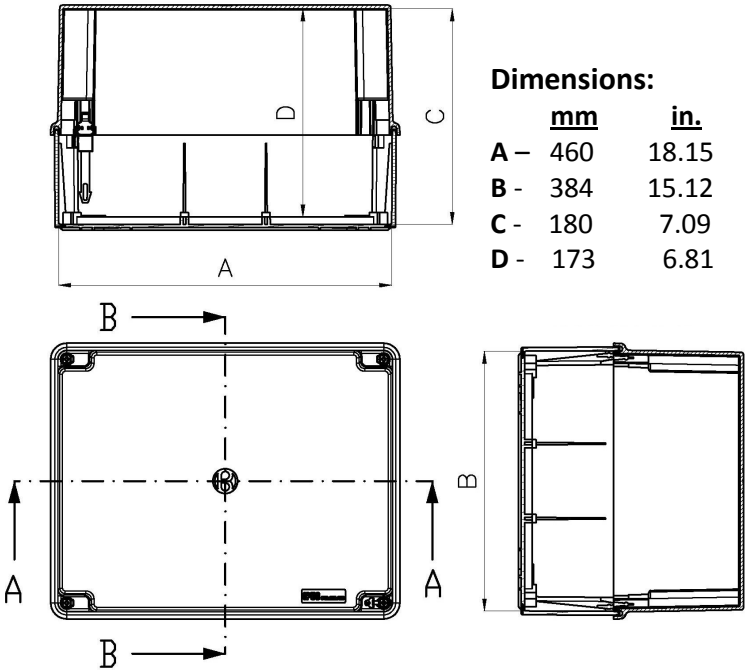

Dimensions:

	mm	in.
A –	460	18.15
B -	384	15.12
C -	180	7.09
D -	173	6.81

Internal Mounting Dimensions

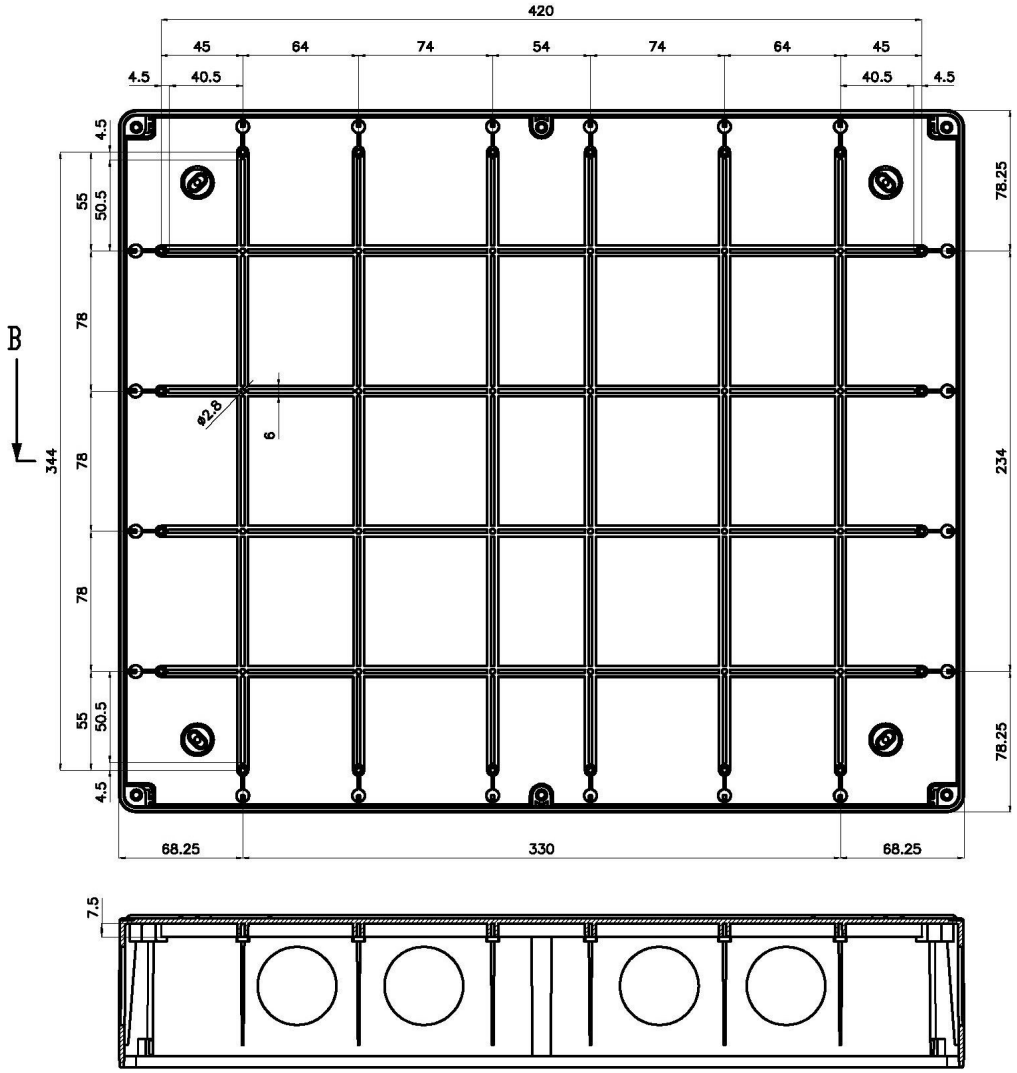

External Dimensions

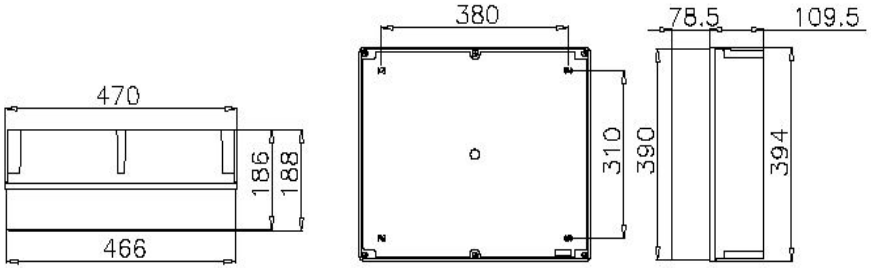

Optional Mounting Foot
Part # - MF-97

Optional Mounting Plate
Part # - MP-1815S

IBOCO
26 Northfield Avenue, Edison, NJ 08837 Tel: 732-417-0066 Fax: 732 417-1166
email: iboco@iboco.com website: www.iboco.com

All Dimensions are in Millimeters.